Homework 5 Current Source

Due Oct. 16 (Next Fri).

Problem 1 Assume V_{SB} = 0. V_{DD}=1.8V. Lmin=0.18 um.

K'n = 140uA/V2, Vtn=0.5 V

a)What is R_{REF} and aspect ratio for each transistor (W/L) if Vout swing is 2 V (that is -1V to +1V) ? And what is the power efficiency ?

b) Use HSPICE to verify your answer.

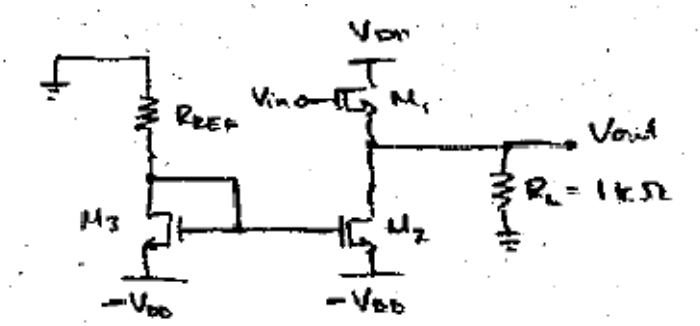

(1)

Problem 2. Assume V_{SB} = 0. V_{DD}=1.8V. Lmin=0.18 um.

K'n = 65uA/ V2. |Vtp|=0.5V. Again, we want to have voltage swing at Vout from -1 V to +1V.

a)What is R_{REF} if Ids1 = 1uA ? What is W/L on M6 and M7 ? What is your Power efficiency (power on load)/(power from supply)?

c) Use HSPICE to get VTC (Vin vs. Vout) and verify your answer on power and power efficiency ?

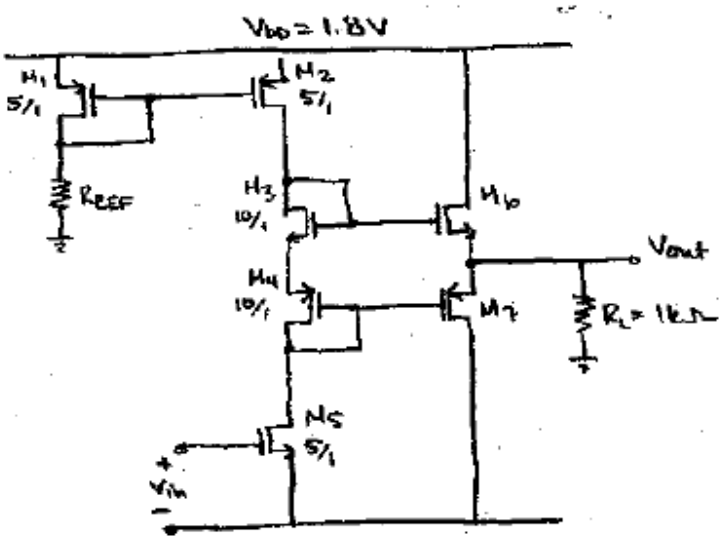

(2)